Where Has All the Judgment Gone?

The Fifth Laurits Bjerrum Memorial Lecture
Presented 5th May, 1980

By Ralph B. Peck

Engineering judgment and earth-dam design go hand in hand. Laurits Bjerrum and I discussed this close relationship many times between 1964 and 1973 while we served together as consultants on five projects. Our first joint assignment, for the U.S. Army Corps of Engineers, was to participate in the investigation of the Good Friday Alaskan earthquake of 1964. The remaining four projects involved dams: failures of construction cofferdams for Cannelton and Uniontown Dams on the Ohio River; investigations of the core and cut-off of the Dead Sea Dikes; and, finally, membership on the Board of Consultants of the James Bay hydroelectric development. Many of you in this audience cooperated with Laurits in these efforts.

Laurits and I were together in Seattle from the 9th to the 13th of August in 1964, attending a meeting on the Alaskan earthquake, when an urgent telephone call from Oslo brought him the unwelcome news that leakage through Hyttejuvet Dam had suddenly increased dramatically from 1 or 2 liters per second to more than ten times that value and was showing no signs of stabilizing. You may be sure that Laurits was worried, and that our spare-time discussions were diverted from the earthquake to the behavior and safety of the dam. It was our first exposure to hydraulic fracturing under reservoir head as a possible mechanism for unexpected behavior of a dam, although we did not recognize it at the time. Indeed, much of the significance of this aspect of Hyttejuvet Dam escaped us until 1966 when Laurits and some of you who were his colleagues at NGI realized that our hundreds of permeability tests in the Dead Sea Dikes were systematically fracturing the core.

Those nine years were a stimulating period that I was fortunate to share with Laurits, a time when the safety of earth dams was high in our thoughts, and a time when we often examined and debated the places of precedent, theory, and judgment in the design of dams. The debate continues in the profession today. Designers and regulatory bodies tend to place increasing reliance on analytical procedures of growing complexity and to discount judgment as a non-quantitative, undependable contributor to design. In my view, a view that I believe Laurits shared, judgment should be cultivated, recognized, and used as our best hope for increasing the safety of earth dams. I shall try to make a case for this point of view in my remarks.

When an engineer at my age talks about judgment, he invites the criticism that he is too old to keep up with the latest advances in theory and methods of calculation and so, having slipped behind the times, he must depend on a somewhat vague attribute called judgment. For myself, there could be considerable truth in such a criticism. I don't know how to set up or solve a problem by means of finite elements. I don't speak computer language. I even rely on judgment to tell me whether I should belive the results of a finite-element study or a computer calculation.

Those of you who know me are aware that I am indeed no theorist. Neither was Terzaghi, even though he wrote the classic text "Theoretical Soil Mechanics". Apart from the theory of consolidation, which Terzaghi adapted from the theory of heat flow, almost all the theories contained in that book were developed by others. He wrote the book not out of a personal liking for theoretical exercises, but because there was already in the 1940's a considerable array of theories that might be applied to geotechnical problems. It was Terzaghi's intention, an intention in which he succeeded admirably, to select from the profuse literature those theoretical concepts that would be useful in practice and that were based on assumptions reasonably compatible with the real behavior of soils.

While Terzaghi was working on "Theoretical Soil Mechanics", the initial subway project was under construction in Chicago, where it was my privilege to be his assistant. One of Terzaghi's closest friends was Albert E. Cummings, then Chicago District Manager for the Raymond Concrete Pile Company. Al adopted me when I came to Chicago, introduced me to the engineering community there, and shared with me his enthusiasm for soil mechanics. He was remarkably familiar with theoretical developments, particularly in

elasticity, that might be applicable to soil mechanics, and he carried on an extensive correspondence with elasticians and workers in soil mechanics throughout the world. He rarely tried to develop the solution for a new problem but searched the literature in the expectation that somewhere the solution already existed. Thus, he knew both the literature of the time and those who were creating it.

Terzaghi appreciated Al's unusual background and had great respect for his abilities. Consequently, he asked Al to read and criticize the various chapters of "Theoretical Soil Mechanics" as they developed in manuscript. It was my good fortune that Al shared them with me, and before long Terzaghi was using us both as guinea pigs. My contributions to the effort were modest, but the impact of the two years, during which Cummings and I discussed and debated the manuscript with each other and with Terzaghi, was to be more profound in my development than I appreciated. I was immersed in theory, in a critical review of the assumptions involved, and in an effort to reduce the useful theories of the time to simple forms for practice. Subconsciously, I absorbed a feeling for the relationships among the variables considered in the theories and acquired, as a by-product of the effort, a certain measure of judgment based on theory. This background has remained with me through the years and has served me well. It is not something I frequently use in a formal way; it is simply there. It guides me in my thinking and in my sense of proportion.

I give you this bit of personal history only because I am sometimes considered to be averse to theoretical developments. I hope it will become apparent that it is misuse or excessive use of theory of which I am critical, not theory itself. Indeed, geotechnical engineering, and for that matter all engineering, has its roots in science, in theory, in experiments, in the ability to calculate. The competence of geotechnical engineers and the complexity of the problems they are able to solve have increased almost entirely because of the growth of engineering science. But growth in engineering science has not reduced the need for judgment. Judgment is required to set up the right lines of scientific investigation, to select the appropriate parameters for calculations, and to verify the reasonableness of the results. What we can calculate enhances our judgment, allows us to make better judgments, permits us to arrive at better engineering solutions.

Yet, although theory can improve our judgment, it can also inhibit judgment if it is used without discrimination and without critical evaluation. The same may be said for many other advances in engineering science and practice.

Whether we like it or not, there remain some aspects of geotechnical engineering in general, and of dam design in particular, that are not yet and may never be amenable to theoretical analysis. This does not mean that we are powerless to deal effectively with these aspects. It does imply, however, that we should not neglect the aspects for which we have no theory while we overemphasize the significance of those for which we do. There is considerable evidence that most failures of modern earth dams, except those due to overtopping, have been the result of exactly these misplaced emphases.

Ever since my days as a student of soil mechanics, undoubtedly reflecting the enthusiasm of my teacher Arthur Casagrande, I have felt that the highest expression of the art of applied soil mechanics lies in the design and construction of earth dams (although I must admit to an almost equal fondness for tunnels). The potential loss of life and property, particularly in heavily populated areas, requires that considerations of safety be placed above all others. The great dams we build today were made possible by two simultaneous developments: giant strides in earth-handling equipment, and the understanding contributed by soil mechanics to the behaviour of earth materials. As a result of developments in soil mechanics, we can make reasonable engineering analyses of the stability of the slopes of dams under various operating conditions, we can select and specify the materials forming a dam in such a way that seepage and erosion within the body of the dam will be controlled, and we can make rational and proper allowance for dynamic effects.

Several earth dams have failed as a consequence of inadequate spillway capacity and overtopping. The vulnerability of earth dams under these conditions has long been recognized. The failures have not been considered a reflection on the inherent stability or permanence of earth dams per se, but rather as a limitation of hydrology that can be accommodated by liberal spillway design. The failure of Baldwin Hills Reservoir in Los Angeles in 1963, an event that attracted world-wide attention, was generally attributed to slow natural or man-induced faulting movements that ruptured brittle drainage elements lining the reservoir. That the reservoir was completed in 1951, well within the era of soil mechanics, was not considered an indictment of soil mechanics or of earth dams because the probability of such fault movements had not yet become a matter of normal consideration in dam design. Confidence still prevailed within the engineering profession and among the public that, save for unexpected and especially unfavourable circumstances, dams designed by qualified engineers would be safe.

The failure of Teton Dam on June 5, 1976, dispelled this confidence. The dam had been designed and constructed under the supervision of an organization considered by engineers and public alike to be among the most authoritative and experienced in the world. The public now could legitimately question whether any earth dam could be considered safe.

Several reveiws of the history of failures of earth dams have led to the conclusion that the probability of catastrophic failure of a dam during any one year is about one chance in 10,000, a probability indicating that about one in every hundred earth dams will fail during a lifetime of 100 years. Proposals (Baecher et al. 1980a and b) have been made that the benefit-cost ratios of projects involving dams should be assessed on the basis of this probability. Furthermore, this probability is taken to be a base level or default value to which a further probability of failure should be added in the event of construction in a seismic area or for other reasons involving higher risk. On the other hand, no reduction of risk should be allowed because of unusually

good features at a site or high expertise on the part of the designers and constructors.

If these statistical postulates appear too unfavourable, we need only reflect that the three principal dam-building agencies in the United States, the Corps of Engineers, the Bureau of Reclamation, and the Tennessee Valley Authority, have been responsible for roughly 500 new dams in the past 20 years. One of these dams, Teton, failed. This alone is a failure rate of one in 10,000 per year. Hence, it is difficult to argue with the statistical conclusions. Yet, as a professional man, I am not satisfied that a probability of failure of one in 10,000 per dam year is the best we can achieve even now.

Investigators of the risk of failure of dams have pointed out that most failures have been associated with circumstances or mechanisms outside the realm of present theoretical analysis. They have, instead, been ascribed to "unthought of" events or to poorly understood, unquantifiable failure mechanisms. It follows that increased use of analysis or increased sophistication of analytical procedures cannot assure for a particular dam a probability of failure lower than the historical value of 10^{-4}. This conclusion should encourage us to concentrate on recognizing and coping with the real causes of failures of dams, not on more and better analyses of modes of failure already routinely and successfully considered in analysis.

If a modern earth dam fails, it does so either because the significance of known conditions has been misjudged, or because unknown and perhaps unsuspected defects, usually in the foundation or abutments, are critical. For these reasons, research and design should be concentrated on better means to disclose and cope with such features. Yet relatively few papers appear that address these problems. Of the eight papers about dams in the 1979 Journal of the Geotechnical Engineering Division ASCE, for example, seven were strictly analytical, being concerned primarily with the response of such structures to earthquakes. Only one dealt with any other aspect of earth-dam design and construction.

The present emphasis on improving analytical procedures is, of course, not itself responsible for the failures of recently designed dams. Further improvements in analysis and greater sophistication in laboratory testing are likely and may even be profitable. It is also likely, however, that the concentration of effort along these lines may dilute the effort that could be expended in investigating the factors entering into other causes of failure.

Let us return to the proposition that the probability of dam failure can be decreased significantly only if the decrease can be made in relation to causes of failure not presently susceptible to analytical procedures. Would it be possible to reduce the incidence of dam failure by a factor of say 10? Is there reason to hope that the historical probability of failure need not be taken as the base level probability? I think there is. I would venture that nine out of 10 recent failures occurred not because of inadequacies in the state of the art, but because of oversights that could and should have been avoided, because of lack of communication among parties to the design and construction of the dams, or because of overoptimistic interpretations of geological conditions. The necessary knowledge existed; it was not used.

In the last 15 years I have had a personal acquaintance with three failures, of recently constructed dams, in which inadequatedly treated joints in the bedrock were a major factor. The nature of the material placed against the joints, including the gradation of transition zones, also played a decisive part. The failures illustrate the role of non-quantifiable factors in determining the safety of a dam. The list includes Teton Dam, Dyke GJ-11A in the Churchill Falls system, and the ring dike at the Sir Adam Beck II power plant in Niagara Falls, Ontario. They illustrate the role of non-quantifiable factors in determining dam safety.

Although the failure of Teton Dam has been extensively studied and described (Chadwick et al. 1976, Eikenberry et al. 1977, 1980), the manner in which it started is not definitely known because the crucial evidence was destroyed by the floodwaters. There is no disagreement, however, over the following facts: Failure began in the right abutment where a steep-sided trench, known as the key trench, had been excavated in the bedrock of the canyon wall. The rock was heavily jointed and the joints in the sides of the trench were open and untreated. The impervious material used for the core and cutoff of the dam, a windblown clayey silt, was placed directly against the rock with no intervening transition zones. A single-line grout curtain, flanked by a row of shallower grout holes on each side, extended beneath the center of the key trench. The curtain was formed by injecting grout through holes drilled in a concrete grout cap cast in a narrow slot formed in the rock along the axis of the key trench. Failure occurred during first filling of the reservoir by piping that breached the lower part of the impervious fill in the key trench of the right abutment. Two separate official technical investigations followed.

The report of the Independent Panel (Chadwick et al. 1976), of which I was a member, concluded that the initial water passage that started the formation of the erosion tunnel through the core could have been an untreated open joint across the bottom of the key trench passing beneath the grout cap, a crack through the core associated with differential settlement or arching due to the steep-sided key trench, or a crack due to hydraulic fracturing assisted by the arching. The Interagency Review Group (Eikenberry et al. 1980), in the course of its more extended study, recommended excavation of a large portion of the unfailed left half of the dam and discovered a widespread thin horizontal wet seam extending from the upstream to the downstream face of the broad core. A few other smaller seams were also found. Although there was no direct evidence, the IRG speculated that the seam could have been present in the core trench of the right abutment at the critical location and, being more erodible than the bulk of the core, could have been a significant factor in initiating the failure. Both investigating groups concluded, however, that irrespective of which weaknesses might have existed at the locus of the initial concentrated flow, the design was deficient in permitting several unfavorable factors to combine: highly erodible core material, heavily jointed rock without dental concrete or surface treatment, lack of transition zones between core and rock, unfavourable stress conditions associated with the narrow steep-sided key trench, and potential for leakage through

the grout curtain beneath the grout cap. The juxtaposition of a fine-grained erodible core material and a highly jointed bedrock was fatal.

At Dyke GJ-11A (Boivin and Seemel 1973), the upstream end of a sub-horizontal relief joint, grouted inadequately possibly because it contained ice that had not melted at the time of grouting, communicated directly with the reservoir. Downstream the joint terminated at an intact block of rock that deflected the reservoir water upward through vertical joints against the till core and downstream filter. The force of the jets of water was so great that the lower part of the till core was disaggregated and the fines washed into the filter. The filter material, in turn, was washed into the rockfill transition zone. As the lower part of the core washed out, a tunnel between the upstream and downstream shells developed beneath the still intact upper part of the core.

The ring dike at Sir Adam Beck II station (Taylor 1963) was constructed on a jointed limestone bedrock covered by a soil utilized as a natural blanket. The blanket was reinforced where it appeared to be inadequate. At one place, however, a construction light pole had been set in a shallow crater blasted out of the limstone. By coincidence, the crater was located at a master joint that passed directly beneath the dike. The soil filling the joint gradually eroded until, after a few years, a breakthrough occurred from the backfilled crater and the water rushed through the joint beneath the core. It then rose through a thin inverted filter under the downstream dumped rockfill, and flushed the filter material up into the rockfill. Consequently the rockfill settled from beneath the sloping core, deprived the core of support, and permitted it to collapse locally to form a sinkhole below reservoir level. Fortunately it was possible to discharge the reservoir quickly. Thus the extent of damage experienced by the dike was limited, but the facility was out of service for several months. The fine-grained inverted filter beneath the downstream rockfill was intended to protect the soil filling the joints in the limestone from eroding into the rockfill if some seepage should pass beneath the core. The designers did not anticipate the large concentrated flow actually experienced.

These three failures have at least two features in common. The first was the presence of joints at the interface between embankment and foundation, either open (Teton, GJ-11A) or filled with erodible material (Sir Adam Beck II). The second was the occurrence of at least one other contributing factor at the place where failure ultimately developed. At Teton there were several: a highly erodible core material, the lack of transition zones between core and rock, the lack of surface treatment of the open joints, and bedrock geometry at the key trenches favoring arching in the core. At GJ-11A, they included the unusual termination of the relief joint at an impervious rock mass that deflected the flow upward against the base of the fill, the ice-filled joint at the time of grouting, and a greater than usual degree of segregation of transition and filter materials downstream from the core so that the fines flushed from the core and filter were not effectively blocked from migrating (although there was evidence that the filter and transition had actually brought the situation under control by the time the head across the dike was effectively lowered by the rising tailwater).

We can infer from these three examples, as well as from many others, that a failure is seldom the consequence of a single shortcoming. Usually there is at least one other defect or deficiency, and the failure occurs where two or more coincide. This inference supports the principle of designing to provide defence in depth, the "belt and suspenders" principle long advocated by Arthur Casagrande. It postulates that if any defensive element in the dam or its foundation should fail to serve its function, there must be one or more additional defensive measure to take its place. Teton Dam is an outstanding example of violation of the principle; the sole line of defense was the core and grout curtain. Under such conditions, it is almost irrelevant to define the precise manner in which the failure started or whether there may have been such deficiencies in construction as a wet seam across the core. The design should have provided adequate defenses against any such defect.

The bedrock treatment appropriate to the geological conditions is a matter of design. It is not an aspect of design susceptible, however, to numerical analysis. Instead, it requires the exercise of judgment, a sense of proportion. When a jointed bedrock foundation is being treated and covered with the first layers of fill – a crucial time with respect to the future performance of the dam – engineers fully acquainted with the design requirements should be present, should have the authority to make decisions on the spot, and should not delegate their authority unless and until they are satisfied that their judgment concerning the particular project has been fully appreciated by their subordinates.

I doubt if guidelines, regulations, or even the best of specifications can take the place of personal interaction between designers and field forces at this stage. Frequently, as a consultant or as a member of a board of consultants, I have walked over a recently exposed foundation or abutment with the field forces, discussing place by place what treatment would be appropriate. Together we studied details of foundation conditions, observed treatment in progress, agreed upon it or changed it. In this manner, the consultants evaluated the potential problems and their solutions, and the field forces gained the necessary insight as to what was required.

The type of foundation treatment is not a matter to be determined by a geologist, unless he is truly an engineering geologist. The geologist should investigate the geological characteristics of the foundation and its interface with the dam and make them known to the engineer who will form the judgment concerning treatment. The consequences of the flow of water near the interface, including its effect on the various materials in the dam, are within the realm of the engineer and the decisions regarding treatment are engineering decisions.

The three failures that I have discussed in some detail originated at the interface between dam and foundation. Others, that might equally well have been chosen as examples, arose from overlooking or misjudging geological features in the foundation itself. A few had their origin in construction defects in the embankment. They had in common

that all were outside the scope of numerical analyses. They would have been prevented if judgment arising from extensive experience had been given full scope in design and construction, and if the design had included multiple defenses. Accordingly, I think it quite possible that the incidence of failure of major dams could be reduced an order of magnitude by focusing attention on the details of design and construction that cannot at least presently be covered by analysis, that perhaps cannot be known until construction is underway, but that require the personal attention of experienced engineers. Research should be directed to those aspects of design and construction in greatest need of improvement; definition of foundation conditions; conditions conducive to internal erosion and the means for controlling it; filter criteria and their practical achievement in construction; prevention and treatment of cracking. The goal of the research should be improved understanding, preferably but not necessarily quantitative.

The literature already has much to say about cracking of earth dams. The emphasis, however, is on the mechanics of producing the initial cracks, an aspect that has recently become at least partly amenable to analysis. The analytical results serve a useful purpose: reduction of cracking can undoubtedly be achieved most successfully if the causes of cracking are understood and avoided. Nevertheless, to accord with the principle of defence in depth, every dam should be designed on the assumption that the core may crack and that the dam should be safe even if it does.

So we must reckon with the conclusion that modern dams seldom if ever fail because of incorrect or inadequate numerical analyses. They fail because inadequate judgment is brought to bear on the problems that, whether anticipated or not, arise in such places as the foundation or the interface between embankment and foundation. Sometimes they disclose themselves only in subtle ways in the use of the observational procedure. Irrespective of specifications, contractual arrangements, possibilities of claims for extras, or delays, these problems must be recognized and solved satisfactorily. If we regard them as second-rate problems, suitable for the application of second-rate judgment, failures of dams will continue at a probability of 10^{-4} per dam year. As long as the myth persists that only what can be calculated constitutes engineering, engineers will lack incentive or opportunity to apply the best judgment to the crucial problems that cannot be solved by calculation.

Where has the judgment gone? It has gone where the rewards of professional recognition and advancement are greatest - to the design office where the sheer beauty of analysis is often separated from reality. It has gone to the research institutions, into the fascinating effort to idealize the properties of real materials for the purposes of analysis and into the solution of intricate problems of stress distribution and deformation of the idealized materials. The incentive to make a professional reputation leads the best people in these directions.

From a probabilistic point of view, it is logical to assume a base level probability of failure of 10^{-4} per dam year. There is no reason, however, why engineers should be satisfied to consider such a failure rate as the norm. Dams should be designed and constructed not to fail, even if a probability of failure is incorporated into the benefit-cost analysis. Since we know wherein the greatest weaknesses lie, we should be able to devise the means for applying judgment to avoid these weaknesses. If we succeed, we should be able to justify a base level probability of failure no more than perhaps 10^{-5} per dam year. Such an improvement is now within the state of the art. Its achievement does not depend on the acquisition of new knowledge. It depends on our ability to bring the best engineering judgment to bear on problems that are essentially nonquantitative, having solutions that are essentially non-numerical. To develop this judgment and to bring it to bear require a recordering of our present views of what constitutes the highest form of our practice of engineering. Without detracting from the necessity for reasonable and meaningful engineering calculations and from the rewards to those who can carry them out, at least equal professional prestige and responsibility should be accorded men of judgment, even when that judgment is not expressed in numerical form.

A lecture in honor of the memory of Laurits Bjerrum, a friend so close that a distance of 10,000 km between our homes was of no consequence, would have no meaning to me had I not prepared it with his influence in mind. At the time of his death, we were both members of the Board of Consultants of the James Bay Project, the greatest single power development in North America. Indeed, Laurits was responsible for my being invited to become a member of the Board. The project was in its early stages and economic pressure dictated that there could be no overconservatism. We considered many ways to reduce the costs of construction in the Northland, including those that you have pioneered here in Norway. But the foundation treatment, as strongly advocated by Laurits from the beginning, has been conservative in concept and exemplary in execution. I think Laurits would have approved. And I have confidence that the more than 220 dams and dikes on that project, aggregating over 140 km in length, will contribute materially to the eventual reduction of the historical probability of failure from 10^{-4} to 10^{-5} per dam year or even less.

Baecher, G., M.-E. Paté and R. deNeufville (1980a): *Dam Failure in Benefit/Cost Analysis.* ASCE Jour. Geot. Eng. Div. Vol. 106, No. GT1, pp. 101-116.

Baecher, G., M.-E. Paté and R. deNeufville (1980b): *Risk of Dam Failure in Benefit-Cost Analysis.* Water Resources Research.

Boivin, R.D. and R.N. Seemel (1973): *The Churchill Falls Power Development.* Construction of the Dykes. Cancold Annual Mtg., Quebec City.

Chadwick, W.L. et al. (1976): *Report to U.S. Dept of the Interior and State of Idaho on Failure of Teton Dam.* (Independent Panel to Review Cause of Teton Dam Failure). U.S. Govt. Printing Office, Wash., D.C.

Eikenberry, F.W. et al. (1977): *Failure of Teton Dam.* A Report of Findings. (U.S. Dept. of the Interior Teton Dam Failure Review Group) U.S. Govt. Printing Office, Wash., D.C.

Eikenberry, F.W. et al. (1980). *Failure of Teton Dam.* Final Report. (U.S. Dept. of the Interior Teton Dam Failure Review Group) U.S. Govt. Printing Office, Wash., D.C.

Taylor, E.M. (1963): *Sir Adam Beck - Niagara Generating Station No. 2.* Pumped Storage Reservoir, Observation of Performance. Eng. Jour. Canada, Vol. 1, No. 28 (Nov.).

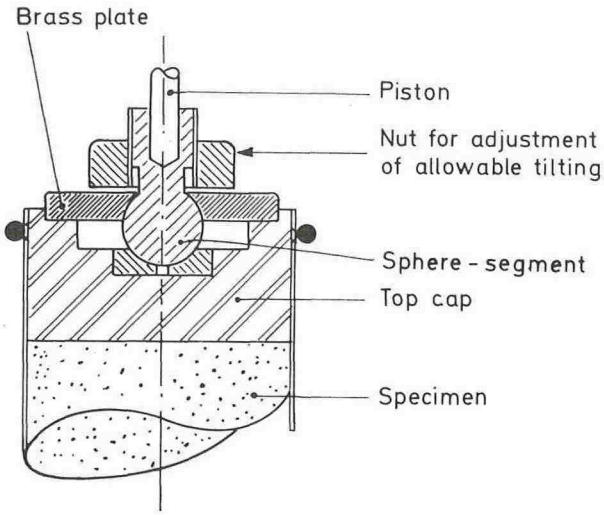

Fig. 3. Details of connection between piston and top cap for static loading cells.

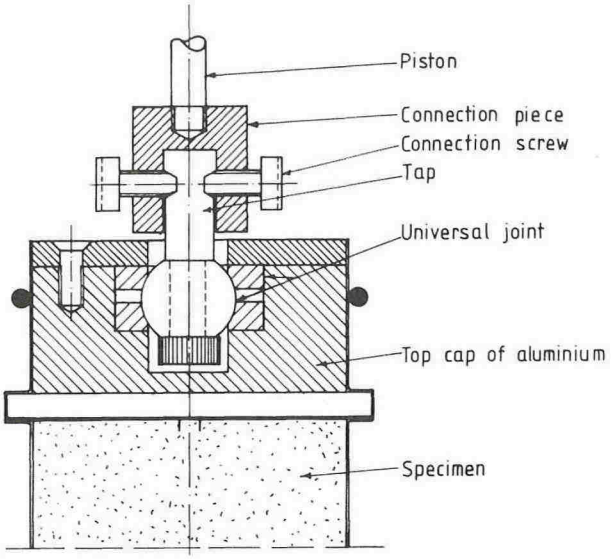

Fig. 5. Details of connection between piston and top cap for cyclic loading cells.

from positive to negative, or from negative to positive, a dead movement of about 0.06 to 0.15 mm was measured in the connection. This is acceptable for static loading but not for two-way cyclic loading tests.

Figure 4 shows the triaxial cell used for cyclic loading tests. The top plate of the cell is divided into two parts, one fixed to the lucite wall, and the other, with the piston, mounted on two columns. When the cell is assembled, the part with the piston is mounted first and the connection between piston and top cap is fastened. Thereafter the lucite cylinder with its top plate is mounted. This type of cell assembly is not new. Cells of this type have been used for several years at MIT and have been described for example by Franke (1978).

Fig. 4. Triaxial cell for cyclic loading tests. (An internal load cell is fixed to the lower end of the piston.)

The reason for making the cell in this way is to facilitate the connection process between the piston and the top cap. This connection is more complicated for cyclic than for static loading tests, because no dead movement can be tolerated in cyclic loading tests. The connection is shown in Fig. 5. During mounting of a specimen, the piston with a connection piece at its bottom end, is lowered over a tap sticking up from the top cap. Then the two connection screws are fastened. The top cap is now fixed to the piston. The universal joint, which is modified to give a minimum of false deformation, allows some tilting of the top cap. The gap between the top cap and the connection piece limits the tilting to ± 4 degrees.

Loading systems

Loading of a triaxial specimen is done by applying a force on the piston through the top of the triaxial cell. Three loading systems are used:

1. Dead weights on the hanger. If a negative (pulling) force is going to be applied, the hanger is replaced by two loading arms, one at each side of the piston. Dead weights are convenient for anisotropic consolidation where the required piston force is less than about 600 N. (This limit, which applies both for positive and negative forces, is due to the hangers and the loading arms. If the dimensions of those are increased, the piston force can also be increased).

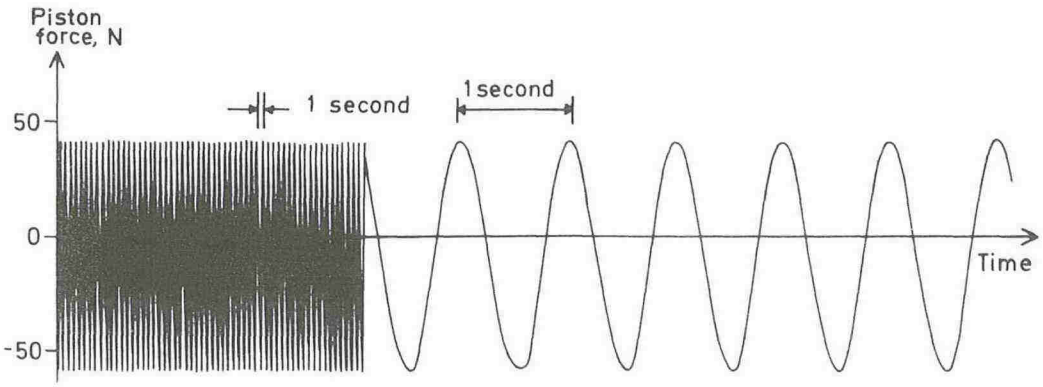

Fig. 6. Example of load pulses created by the cyclic loading system. (Printout from strip chart recorder.)

2. An air-operated double-acting piston on the top of the loading frame. The force can be either positive or negative. This system is used for anisotropic consolidation, especially if the required piston force is greater than about 600 N, and when the consolidation load should be applied continuously and automatically.

   The double-acting piston is also used for cyclic loading. The piston is then driven by a sinusoidally varying air pressure which is created by a mechanically driven plunger valve. The load period can be as short as one second and the shape of the loading pulse is almost sinusoidal. (See Fig. 6).*)

3. A motordriven loading press, which is used to deform the specimen at a constant rate. This is the same press as described by Andresen and Simons (1960), with some later modifications. The tooth-wheel combinations for the most usual speeds have been photographed. The time needed to change from one to another speed is thereby reduced. The press is also equipped with two electrical switches; one can stop the press after a certain displacement, and the other can stop the press after a certain time. The vertical columns in the loading frame have been reinforced so that a maximum load of 3.5 tons can be applied.

*) A similar device has been described by Chan (1976).

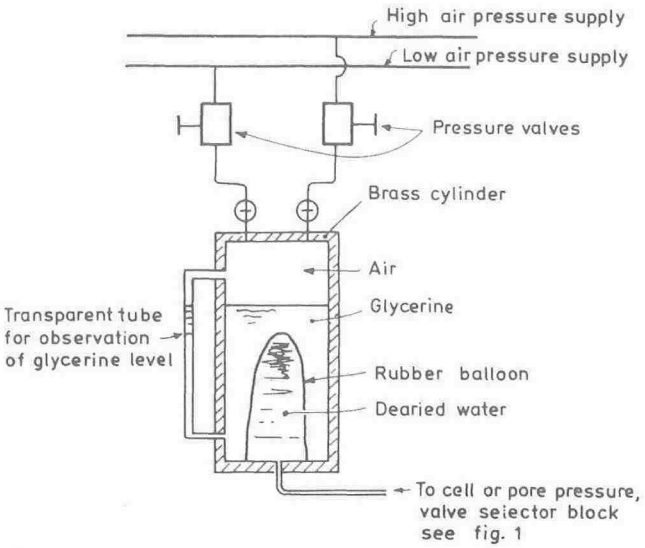

Fig. 7. Details of air pressure system. (Principal sketch.)

Cell pressure and pore pressure systems

The cell and the pore pressures are usually applied by bleeding air pressure valves. The system includes two valves, respectively connected to the low and high pressure supplies (see Fig. 7). The low pressure valve, maximum pressure 4 bars, is of the Nordgren type. The high pressure valve, maximum pressure 20 bars, is of the Fairchild type.

Both valves can be adjusted, either manually or automatically, through small DC-motors. The air pressure acts on the surface of glycerine enclosed in a brass cylinder. Submerged in the glycerine is a rubber balloon filled with deaired water which is connected to the cell pressure or the pore pressure valve block. Glycerine is used, since, according to Winter and Goldscheider (1978), it has almost no solubility for air. The idea of using glycerine in an air-water interface cell was put forward by Winter and Goldscheider.

The air pressure systems have replaced the constant pressure cells described by Andresen and Simons (1960), but these cells are still used for certain purposes, for example when a small difference between cell and pore pressures must be kept constant at the same time as the back pressure is very high or for calibrating pressure manometers. Pressures up to 20 bars can be kept constant within limits of about ± 0.005 bars. The required pressure is obtained by applying loads to a piston acting into a chamber filled with oil and water. The constant pressure cells have been considerably improved since 1960. The volume capacity has been doubled by increasing the length of the